Financial Time Series Prediction Using Advanced Neural Network Models

Yujie Wu
Research Assistant Professor

Preliminary & Prerequisite

Prerequisites

- Fundamental understanding of artificial neural networks
- Familiar with Python programming (Numpy and PyTorch)

Financial Time-Series Prediction Tasks

Task description: predict future values based on historical data

Examples:

stock market prediction, risk management, and automated trading

Challenges:

noisy signals, non-stationary patterns, high dimensionality, and complex dependencies

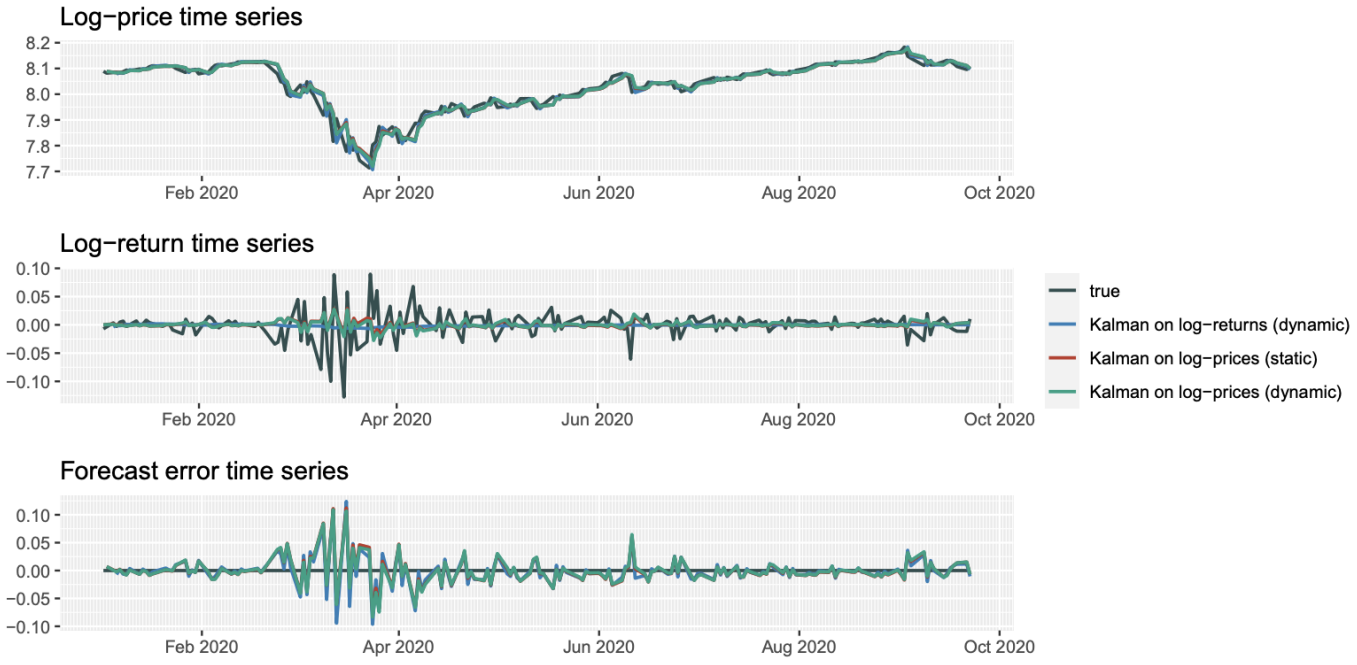

Courtesy of Daniel P. Palomar (2025). Portfolio Optimization: Theory and Application.

Advanced Neural Network Models

Traditional methods:
Linear regression,.
Advanced neural network models:
RNN, LSTM…

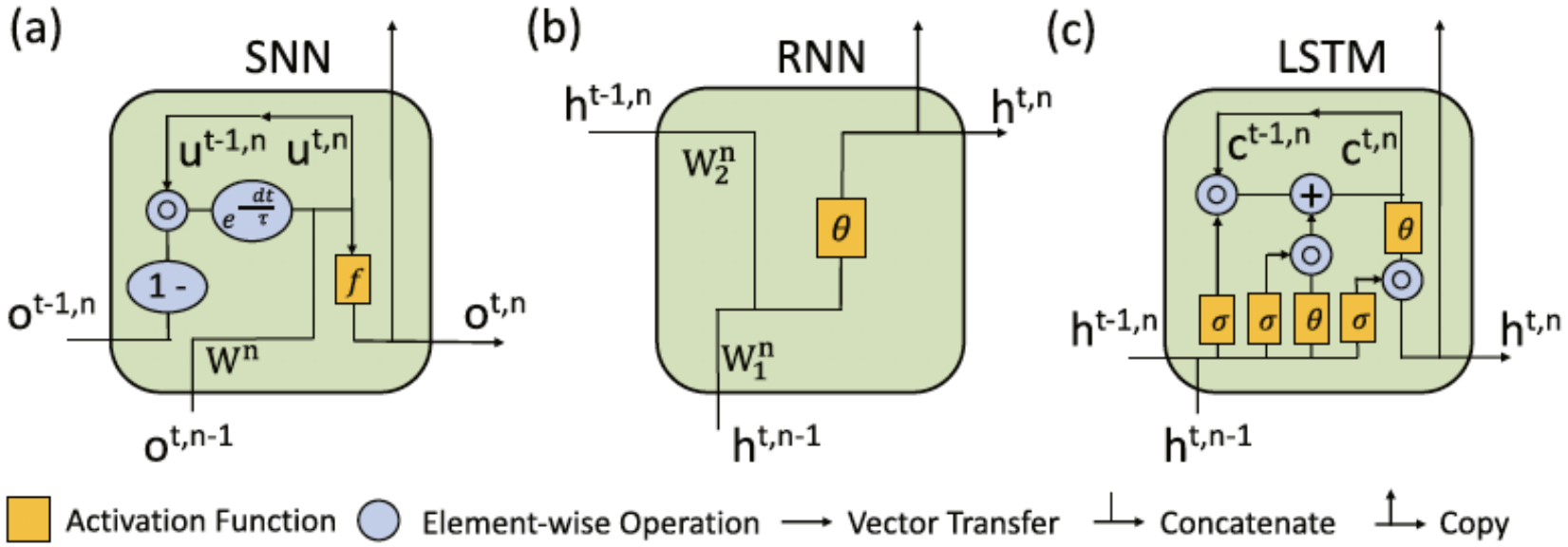

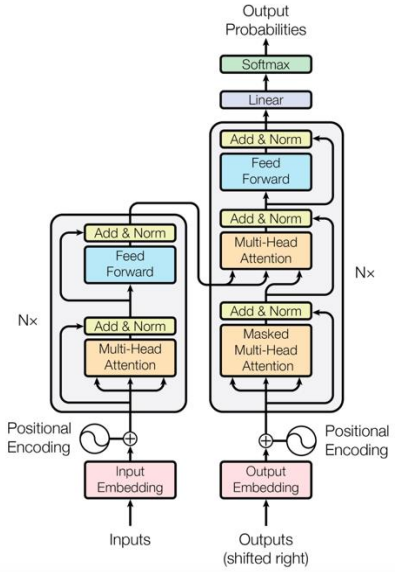

Transformer

Description of the Project

- **Target:** Each team member is expected to handle one financial prediction scenario using two advanced neural network models and addressing distinct financial prediction tasks.
- **Assessment**: Evaluation will be based on code reproducibility, model performance analysis, classification accuracy, and reported training/testing loss.

Model suggestions:

RNN/LSTM

SNNs

Transformer

Structured state space models

...

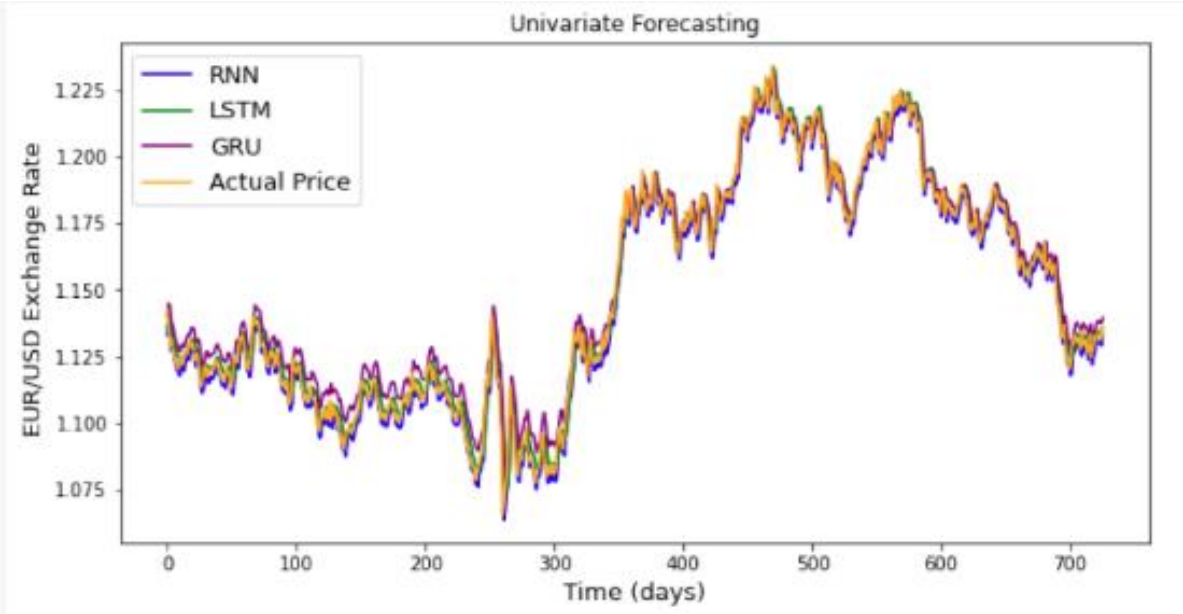

Project Goal & Expected Outcome

Goal

- To be familiarize with advanced neural network models, from foundational concepts to sophisticated applications, cultivating comprehensive insight into the domain.
- Proficient application of at least TWO neural network models to address time series prediction tasks

Schedule

1. Learn the background of neural networks and training platforms (**1 month**)
2. Reproduce two neural network models and explore one prediction task (**1-2 months**)
3. Analyse the impact of network hyper-parameters on performance (**1 month**)
4. Write the report (**1 month**)

Plan of final year project

S1. Learn what MLPs and RNNs are

S2. how to use RNNs for time-series prediction, and familiarize yourself with the PyTorch framework and try to find some financial time-series prediction datasets

S3. Apply RNNs, LSTMs, or any other models you're interested in two datasets

S4. Analyze the performance and write a report

Tips:

For step1: Use GPT can help you learn this concept and even code your project

For step2: https://encord.com/blog/time-series-predictions-with-recurrent-neural-networks/

For step3: https://github.com/ShubhamG2311/Financial-Time-Series-Forecasting